AC INDUCTION MOTOR DATA SHEET
UL EXPLOSION PROOF MOTORS

MODEL NUMBER	**IXHHI125-36-444TS**
HORSEPOWER	**125**
RPM / POLES	**3600 / 2**
VOLTAGE / PHASE	**230 / 460 V / 3**
FRAME	**444TS**
ENCLOSURE / DEGREE OF PROTECTION	**TEFC / IP54**
FREQUENCY	**60 HZ**
FULL LOAD SPEED	**3570 RPM**
SERVICE FACTOR	**1.15**
INSULATION CLASS	**F Class N Varnish**
FULL LOAD AMPS; 230 / 460	**278.9 / 139.5 A Usable On 208 V At 308 A**
LOCKED ROTOR CURRENT (% Full Load)	**700 / 700 %**
NEMA CODE LETTER	**G**
EFFICIENCY / POWER FACTOR	LOAD / EFF. / P.F. **100 % / 95.0 % / 90.0 %** **75 % / 95.0 % / 89.0 %** **50 % / 93.5 % / 87.0 %**
DUTY CYCLE	**S1 / Continuous**
TORQUE	FULL LOAD / LRT / BDT **187.5 lb.ft. / 120 % / 220 %**
NEMA DESIGN	**B**
MOMENT OF INERTIA	LOAD (Max.) / MOTOR **238.491 lb.ft.^{2} / 27.420 lb.ft.^{2}**
SOUND PRESSURE LEVEL (No Load 1 M From Motor)	**92 dB(A)**
MAX. SHAFT VIBRATION	**0.08 In/Sec – Peak Velocity**
NUMBER OF STARTS (Hot / Cold)	**2 Hot / 3 Cold**
MAX. ELEVATION	**3300 Ft. Above Sea Level**
TEMPERATURE RISE (At Full Load)	**80° C**
DRIVE-END BEARING	**6314C3**
OPPOSITE DRIVE-END BEARING	**6314C3**
GREASE TYPE	**Mobil Polyrex EM**
MOUNTING	**F1, W6, W8, B3, V5, V6**
ROTATION	**Bi-Directional**
APPROXIMATE WEIGHT	**2,006 lbs.**
AREA CLASSIFICATION	**Class I, Division 1, Groups C and D**
TEMPERATURE CODE WITH THERMOSTAT USE	**T4**
TEMPERATURE CODE AT 40°C AMBIENT	**T2C**
TEMPERATURE CODE AT 55°C AMBIENT	**T2B**
THERMOSTAT TYPE	**Normally Closed**
INVERTER RATING	**4:1 CT (Constant) / 10:1 CT (Intermittent-1 Hour) / 10:1 VT**
INSULATION TYPE	**Hyundai Inverter Shield, Meets NEMA MG1 Part 31**
UL CERTIFICATION NUMBER	**E216236**

EEV 109973

CC 038A

REVISED 04/01/14

HYUNDAI HEAVY INDUSTRIES CO., LTD.

본 도면은 현대중공업(주) 재산이므로 허가없이 복사할 수 없음 (취급유의)

THIS DRAWING IS PROPRIETARY TO HHI. NO PART OF THIS DRAWING MAYBE REPRODUCED WITHOUT THE PERMISSION OF HHI.

HYUNDAI HEAVY INDUSTRIES CO., LTD.

TEFC

THREE PHASE INDUCTION MOTOR

TYPE	XKP,XIP
	Cast iron frame

FRAME SIZE	OUTPUT(HP)	POLES	Hz	TIME RATING
444TS			60	CONT

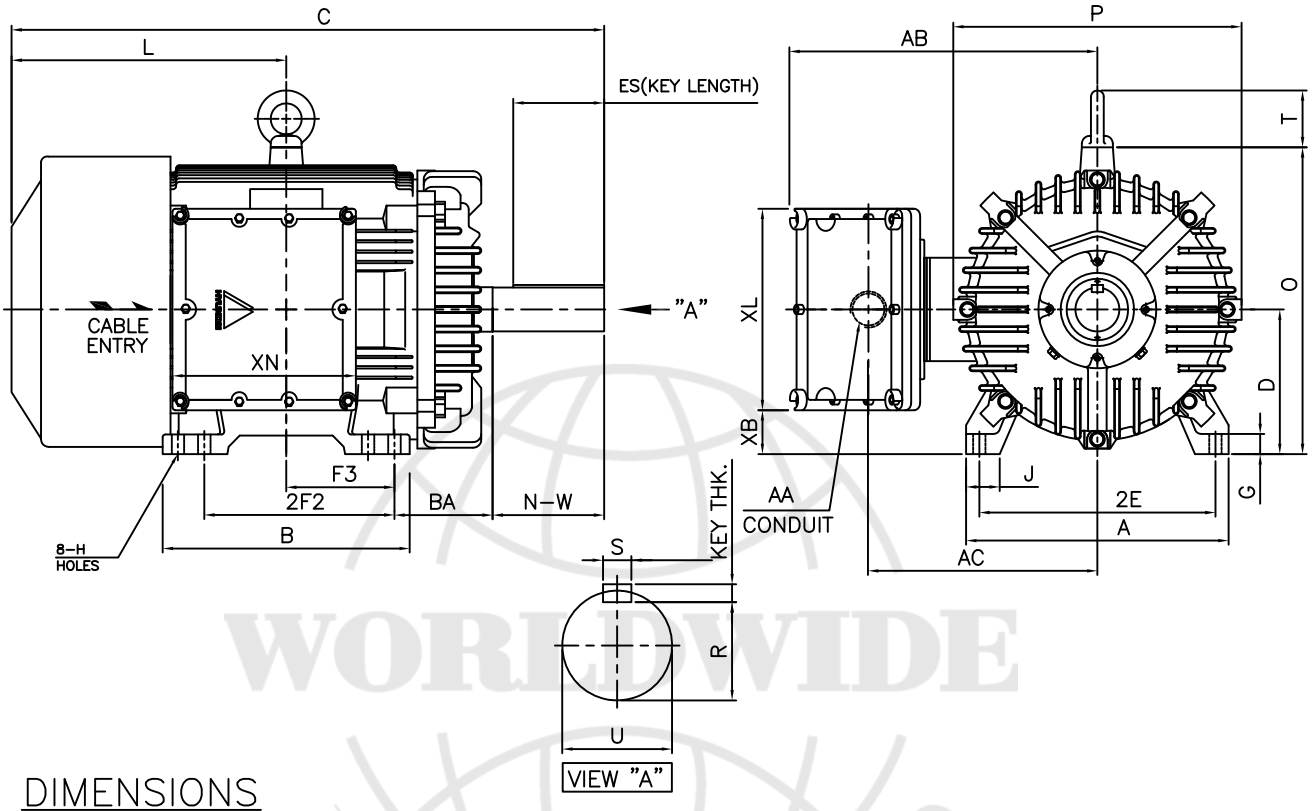

DIMENSIONS

MOUNTING									CONDUIT BOX						APPROX. WGT.(LB)
A	B	2E	2F1	2F2	F3	G	J	H	AA	AB	AC	XB	XL	XN	
20.00	18.81	18.00	–	14.50	8.248	1.53	2.56	0.81	3.00	24.01	18.30	3.34	15.35	13.97	2P: 2006 or 4P: 2116 or 6P: 2116

OVERALL							SHAFT					KEY	BEARING	
BA	C	D	L	O	P	T	U	N-W	KEYWAY R	KEYWAY ES	KEYWAY S	THK.	DRIVE END	OPP. DRIVE END
7.50	41.40	11.00	20.92	23.38	21.97	4.33	2.375	4.75	2.021	3.03	0.625	0.625	6314C3	6314C3

NOTE

1. Dimension "D" tolerance : +0.00inch – 0.03inch (143T–365T) ; +0.000inch – 0.06inch (404T–449T)
2. Dimension "U" tolerance : +0.000inch – 0.005inch (143T–215T), +0.000inch – 0.001inch (254T–449T)
3. Dimension "R" tolerance : +0.000inch – 0.015inch

Q'TY	DESCRIPTION	MATERIAL	DIMENSION	WEIGHT	PART NO.	REMARK	NO.

APPD BY		UNIT	mm
CHKD BY		SCALE	1/15
CHKD BY		PROJEC'N	3각법(3rd Angle)
DSND BY	김종선	DATE	2012-02-16

SUBJECT: 444TS

DWG SIZE: A4 (1:15)

TITLE: Outline

HYUNDAI HEAVY INDUSTRIES CO., LTD.

REF. NO:

Sheet No. of

DWG NO: LM-U0444B3SL001

Revision No. 1