AC INDUCTION MOTOR DATA SHEET
UL EXPLOSION PROOF MOTORS

MODEL NUMBER	**XHHI20-18-256T**		
HORSEPOWER	**20**		
RPM / POLES	**1800 / 4**		
VOLTAGE / PHASE	**230 / 460 V / 3**		
FRAME	**256T**		
ENCLOSURE / DEGREE OF PROTECTION	**TEFC / IP54**		
FREQUENCY	**60 HZ**		
FULL LOAD SPEED	**1775 RPM**		
SERVICE FACTOR	**1.15**		
INSULATION CLASS	**F Class N Varnish**		
FULL LOAD AMPS 230/460 VOLTS	**49.7 / 24.8 A**		
LOCKED ROTOR CURRENT (% Full Load)	**680 / 680 %**		
NEMA CODE LETTER	**H**		
EFFICIENCY / POWER FACTOR	LOAD	EFF.	P.F.
	100 %	**93.0 %**	**81.5 %**
	75 %	**93.0 %**	**78.0 %**
	50 %	**92.0 %**	**70.0 %**
DUTY CYCLE	**S1 / Continuous**		
TORQUE	FULL LOAD	LRT	BDT
	59.5 lb.ft.	**200 %**	**240 %**
NEMA DESIGN	**B**		
MOMENT OF INERTIA	LOAD (Max.)		MOTOR
	303.750 lb.ft.^{2}		**2.635 lb.ft.^{2}**
SOUND PRESSURE LEVEL (No Load 1 M From Motor)	**74 dB(A)**		
MAX. SHAFT VIBRATION	**0.08 In/Sec – Peak Velocity**		
NUMBER OF STARTS (Hot / Cold)	**2 Hot / 3 Cold**		
MAX. ELEVATION	**3300 Ft. Above Sea Level**		
TEMPERATURE RISE (At Full Load)	**80° C**		
DRIVE-END BEARING	**6309ZC3**		
OPPOSITE DRIVE-END BEARING	**6309ZC3**		
GREASE TYPE	**Mobil Polyrex EM**		
MOUNTING	**F1, W6, W8, B3, V5, V6**		
ROTATION	**Bi-Directional**		
APPROXIMATE WEIGHT	**350 lbs.**		
AREA CLASSIFICATION	**Class I, Division 1, Groups C and D**		
TEMPERATURE CODE WITH THERMOSTAT USE	**T4**		
TEMPERATURE CODE AT 40°C AMBIENT	**T2C**		
TEMPERATURE CODE AT 55°C AMBIENT	**T2B**		
THERMOSTAT TYPE	**Normally Closed**		
UL CERTIFICATION NUMBER	**E216236**		

EEV 109973

CC 038A

REVISED 08/01/13

HYUNDAI HEAVY INDUSTRIES CO., LTD.	TEFC THREE PHASE INDUCTION MOTOR	TYPE	XLP, XJP CAST IRON FRAME

FRAME SIZE	OUTPUT(HP)	POLES	Hz	TIME RATING

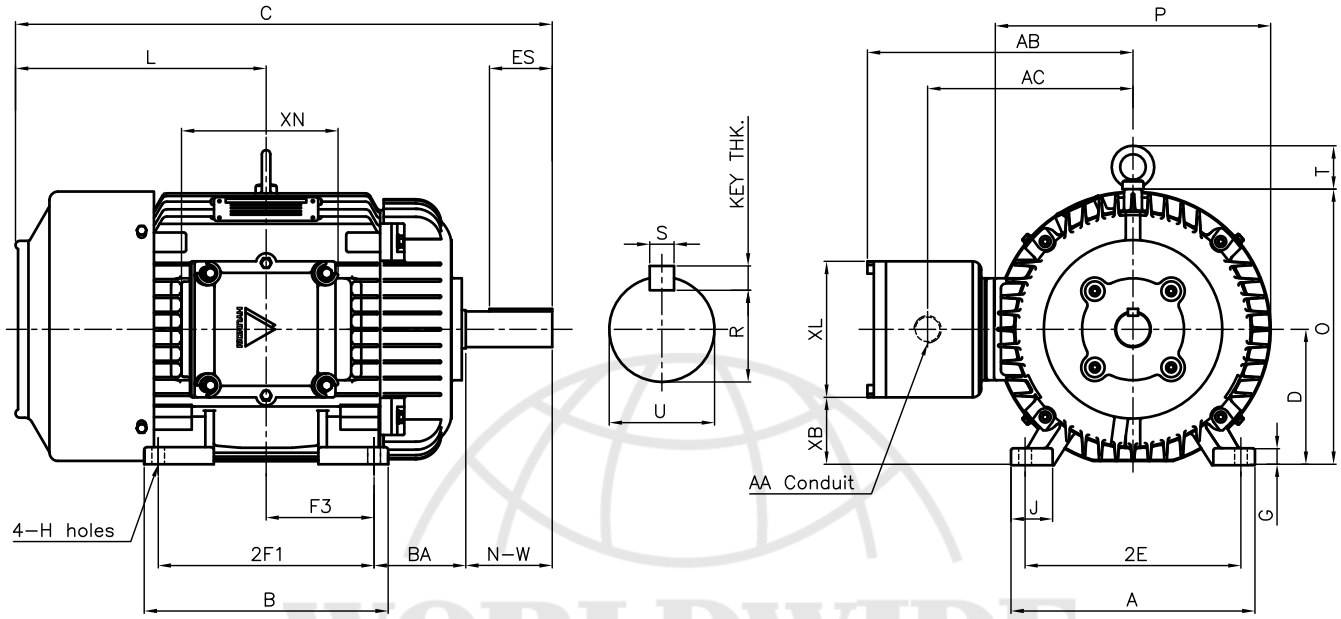

DIMENSIONS

MOUNTING									CONDUIT BOX						APPROX. WGT.(LB)
A	B	2E	2F1	2F2	F3	G	J	H	AA	AB	AC	XB	XL	XN	
11.30	11.30	10.00	10.00	–	5.00	0.72	1.93	0.53	1.25	12.01	9.51	3.15	6.30	7.32	350

OVERALL							SHAFT					KEY THK.	BEARING	
BA	C	D	L	O	P	T	U	N-W	KEYWAY				DRIVE END	OPP. DRIVE END
									R	ES	S			
4.25	24.86	6.25	11.61	12.75	12.76	2.01	1.625	4.00	1.416	2.91	0.375	0.375	6309ZC3	6309ZC3

NOTE

1. Dimension "D" tolerance : +0.00inch – 0.03inch
2. Dimension "U" tolerance : +0.000inch – 0.001inch
3. Dimension "R" tolerance : +0.000inch – 0.015inch

APPD BY	J. H. KIM	UNIT	INCH	SUBJECT	NEMA 256T	CAD PROJ \ FILE XSMOUTN\A1108AA
CHKD BY	K. S. LEE	SCALE	1/8	TITLE	OUTLINE	
CHKD BY		PROJEC'N	3rd Angle			
DSND BY	KIM IN KYU	DATE	2010.12.31			
HYUNDAI HEAVY INDUSTRIES CO., LTD. Electro-Electric System Division				REF. NO	A1108AA	Sheet No. of
				DWG NO	LM-U1256B3TL001	Revision No. 0

WORLDWIDE Electric Corp.