AC INDUCTION MOTOR DATA SHEET
IEEE-841 MOTORS

MODEL NUMBER	**IEEE40-36-324TSC**
HORSEPOWER	**40**
RPM / POLES	**3600 / 2**
VOLTAGE / PHASE	**460 / 3**
FRAME	**324TSC**
ENCLOSURE / DEGREE OF PROTECTION	**TEFC / IP55**
FREQUENCY	**60 HZ**
FULL LOAD SPEED	**3560 RPM**
SERVICE FACTOR	**1.15**
INSULATION CLASS	**F Class N Varnish**
FULL LOAD AMPS	**45.5 A**
LOCKED ROTOR CURRENT (% Full Load)	**650 %**
NEMA CODE LETTER	**G**
EFFICIENCY / POWER FACTOR	LOAD / EFF. / P.F. **100 % / 92.4 % / 89.5 %** **75 % / 92.6 % / 88.5 %** **50 % / 91.4 % / 86.0 %**
DUTY CYCLE	**S1 / Continuous**
TORQUE	FULL LOAD / LRT / BDT **59.4 lb.ft. / 160 % / 230 %**
NEMA DESIGN	**B**
MOMENT OF INERTIA	LOAD (Max.) / MOTOR **71.192 lb.ft.^{2} / 3.987 lb.ft.^{2}**
SOUND PRESSURE LEVEL (No Load 1 M From Motor)	**82 dB(A)**
MAX. SHAFT VIBRATION	**0.08 In/Sec – Peak Velocity**
NUMBER OF STARTS (Hot / Cold)	**2 Hot / 3 Cold**
MAX. AMBIENT TEMPERATURE	**40° C**
MAX. ELEVATION	**3300 Ft. Above Sea Level**
TEMPERATURE RISE (At Full Load)	**80° C**
DRIVE-END BEARING	**6313ZC3**
OPPOSITE DRIVE-END BEARING	**6211ZC3**
BEARING SEAL TYPE	**ProTech™ IP66 Labyrinth On DE and ODE**
GREASE TYPE	**Mobil Polyrex EM**
MOUNTING	**F1 (F2 Suitable), W6, W8, B3, V5, V6**
ROTATION	**Bi-Directional**
APPROXIMATE WEIGHT	**530 lbs**
AREA CLASSIFICATION	**Class I, Division 2, Groups A, B, C, D, T3A**
PAINT	**Epoxy**
INVERTER RATING	**10:1 CT / 1000:1 VT**
INSULATION TYPE	**Hyundai Inverter Shield, Meets NEMA MG1 Part 31**
SPECIFICATION - In Accordance With	**IEEE-841, Version 2009, NEMA, CSA**

EEV 109973

CC 038A

REVISED 08/01/13

HYUNDAI HEAVY INDUSTRIES CO., LTD.	IEEE841 TEFC THREE PHASE INDUCTION MOTOR	TYPE	PLP CAST IRON FRAME

FRAME SIZE	OUTPUT(HP)	POLES	Hz	TIME RATING

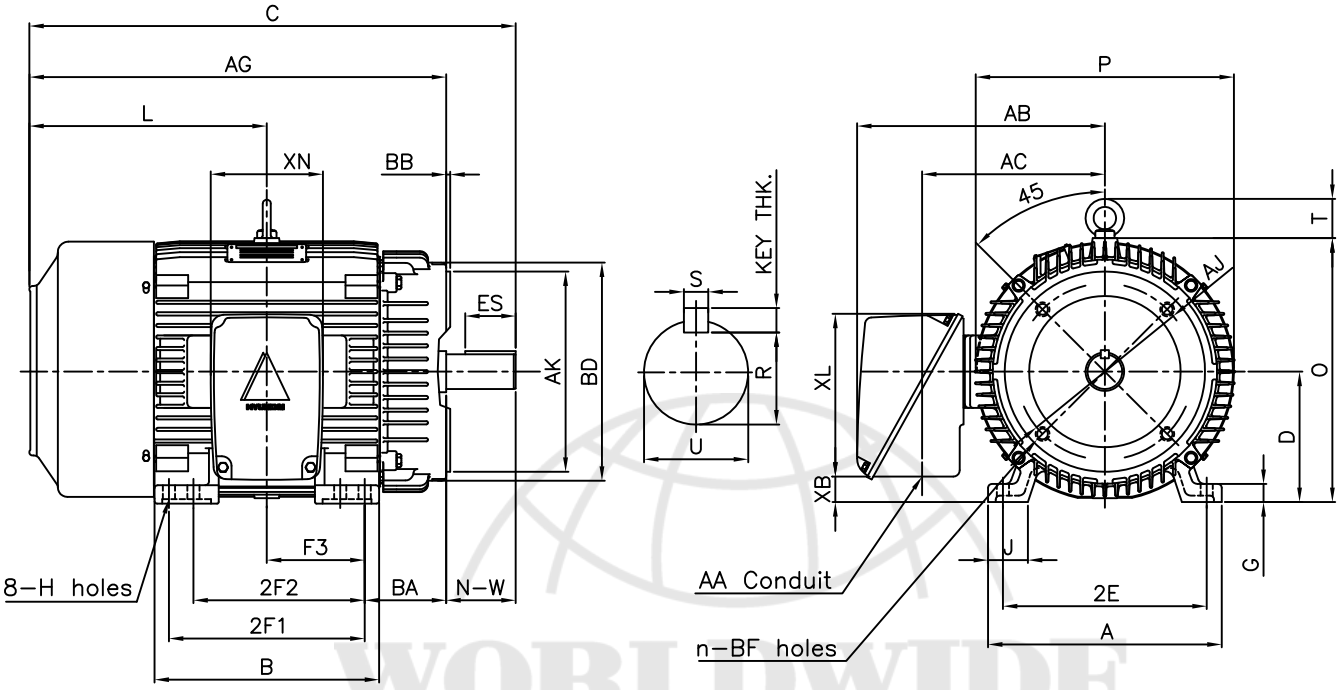

FLANGE						MOUNTING								
AJ	AK	BD	BB	BF	n	A	B	2E	2F1 5)	2F2 4)	F3	G	J	H
11.0	12.50	13.27	0.25	5/8-11	4	14.33	13.78	12.50	12.00	10.50	6.00	1.11	2.44	0.66

CONDUIT BOX						OVERALL								APPROX. WGT.(LB)	
AA	AB	AC	XB	XL	XN	AG	BA	C	D	L	O	P	T	324TS	326TS
2.00	15.20	11.21	1.57	10.16	7.01	25.82	5.25	29.60	8.00	14.60	16.19	15.84	2.41	530	540

SHAFT					KEY THK.	BEARING	
U	N-W	KEYWAY				DRIVE END	OPP. DRIVE END
		R	ES	S			
1. 75	3.75	1.591	2.03	0.500	0.500	6313ZC3	6211ZC3

NOTE

1.Dimension "D" tolerance : +0.00inch – 0.03inch
2.Dimension "U" tolerance : +0.000inch – 0.001inch
3.Dimension "R" tolerance : +0.000inch – 0.015inch
4.Location of holes for 324TSC frame
5.Location of holes for 326TSC frame

APPD BY	KIM.Y.S	UNIT	INCH	SUBJECT	NEMA 324TSC/326TSC	CAD PROJ \ FILE XSMOUTN\A8312BA
CHKD BY	KO.S.H	SCALE	1/12	TITLE	OUTLINE	
CHKD BY		PROJEC'N	3rd Angle			
DSND BY	LEE KWANG SOO	DATE	2004.04.02			
HYUNDAI HEAVY INDUSTRIES CO., LTD. Electro-Electric System Division				REF. NO	A1312BA	Sheet No. of
				DWG NO	350A8312BA	Revision No. 0

WORLDWIDE Electric Corp.

HYUNDAI HEAVY INDUSTRIES CO.,LTD.	PERFORMANCE CURVE	CURVE NO. P-PLP324SR1

Type :	PLP	
Full Load Torque :	59.4	lb.ft
Motor moment of Inertia (J) :	3.987	lb.ft ^{2}
Load moment of Inertia (J) :	71.192	lb.ft ^{2}

30 kW	40 HP		60 Hz	
2 P	Rated Speed :	3560 RPM		
Rated Voltage	460V			
Full Load Current	45.5A			

SPEED VS TORQUE & CURRENT CURVE

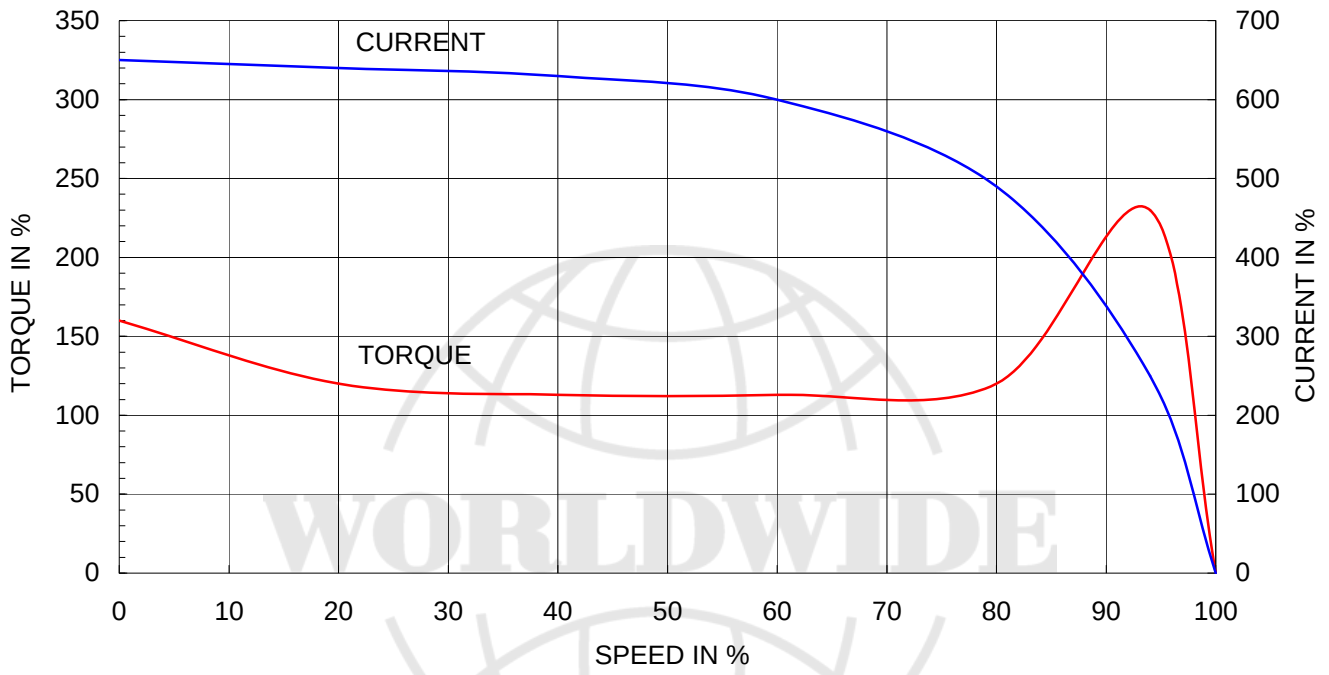

OUTPUT VS EFF., P.F & CURRENT CURVE

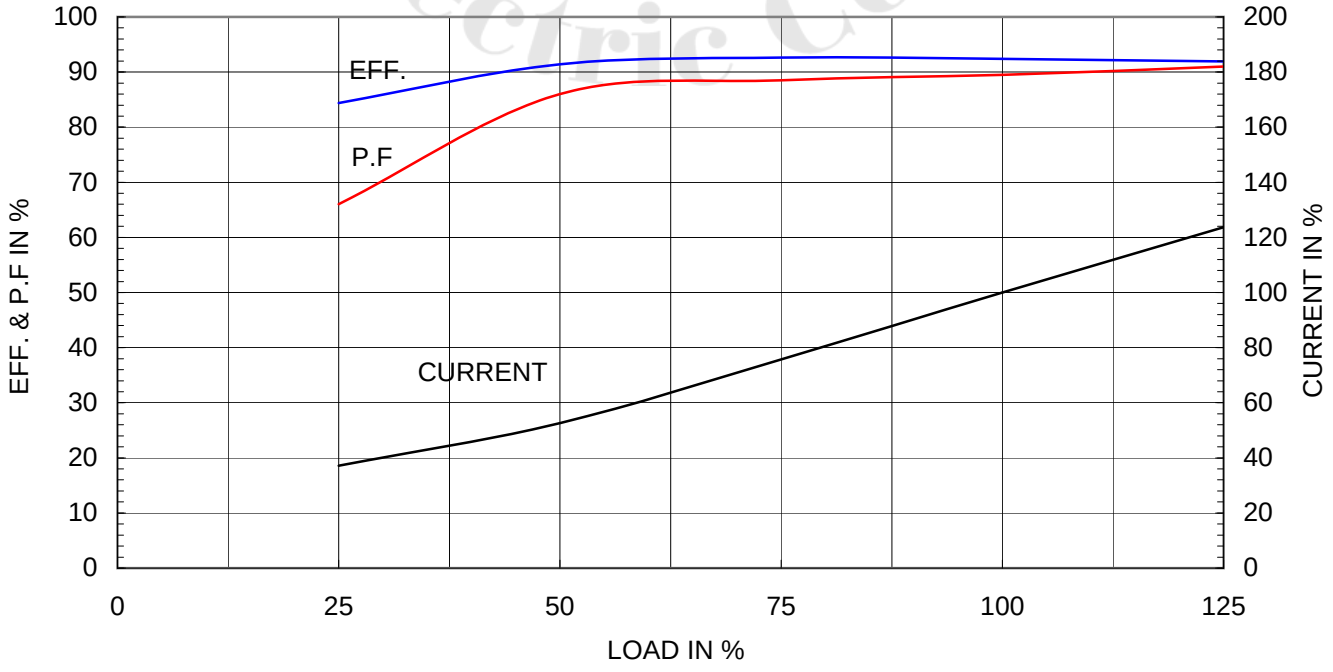

WORLDWIDE Electric Corp.