HYUNDAI HEAVY INDUSTRIES CO.,LTD.

WORLDWIDE Electric Corp

AC INDUCTION MOTOR DATA SHEET
IEEE-841 MOTORS

MODEL NUMBER	**IEEE50-18-326T**		
HORSEPOWER	**50**		
RPM / POLES	**1800 / 4**		
VOLTAGE / PHASE	**460 / 3**		
FRAME	**326T**		
ENCLOSURE / DEGREE OF PROTECTION	**TEFC / IP55**		
FREQUENCY	**60 HZ**		
FULL LOAD SPEED	**1780 RPM**		
SERVICE FACTOR	**1.15**		
INSULATION CLASS	**F Class N Varnish**		
FULL LOAD AMPS	**59.9 A**		
LOCKED ROTOR CURRENT (% Full Load)	**700 %**		
NEMA CODE LETTER	**H**		
EFFICIENCY / POWER FACTOR	LOAD **100 %** **75 %** **50 %**	EFF. **94.5 %** **94.5 %** **93.3 %**	P.F. **82.0 %** **79.5 %** **74.0 %**
DUTY CYCLE	**S1 / Continuous**		
TORQUE	FULL LOAD **146.4 lb.ft**	LRT **160 %**	BDT **220 %**
NEMA DESIGN	**B**		
MOMENT OF INERTIA	LOAD (Max.) **569.532 lb.ft^2**		MOTOR **8.307 lb.ft^2**
SOUND PRESSURE LEVEL (No Load 1 M From Motor)	**77 dB(A)**		
MAX. SHAFT VIBRATION	**0.08 In/Sec – Peak Velocity**		
NUMBER OF STARTS (Hot / Cold)	**2 Hot / 3 Cold**		
MAX. AMBIENT TEMPERATURE	**40° C**		
MAX. ELEVATION	**3300 Ft. Above Sea Level**		
TEMPERATURE RISE (At Full Load)	**80° C**		
DRIVE-END BEARING	**6313ZC3**		
OPPOSITE DRIVE-END BEARING	**6211ZC3**		
BEARING SEAL TYPE	**ProTech™ IP66 Labyrinth On DE and ODE**		
GREASE TYPE	**Mobil Polyrex EM**		
MOUNTING	**F1 (F2 Suitable), W6, W8, B3, V5, V6**		
ROTATION	**Bi-Directional**		
APPROXIMATE WEIGHT	**560 lbs**		
AREA CLASSIFICATION	**Class I, Division 2, Groups A, B, C, D, T3A**		
PAINT	**Epoxy**		
INVERTER RATING	**10:1 CT / 1000:1 VT**		
INSULATION TYPE	**Hyundai Inverter Shield, Meets NEMA MG1 Part 31**		
SPECIFICATION - In Accordance With	**IEEE-841, Version 2009, NEMA, CSA**		

C SP US CSA E EEV 109973 ee CC 038A CE VL

REVISED 08/01/13

HYUNDAI HEAVY INDUSTRIES CO., LTD.

IEEE841 TEFC

THREE PHASE INDUCTION MOTOR

TYPE	PLP
	CAST IRON FRAME

FRAME SIZE	OUTPUT(HP)	POLES	Hz	TIME RATING

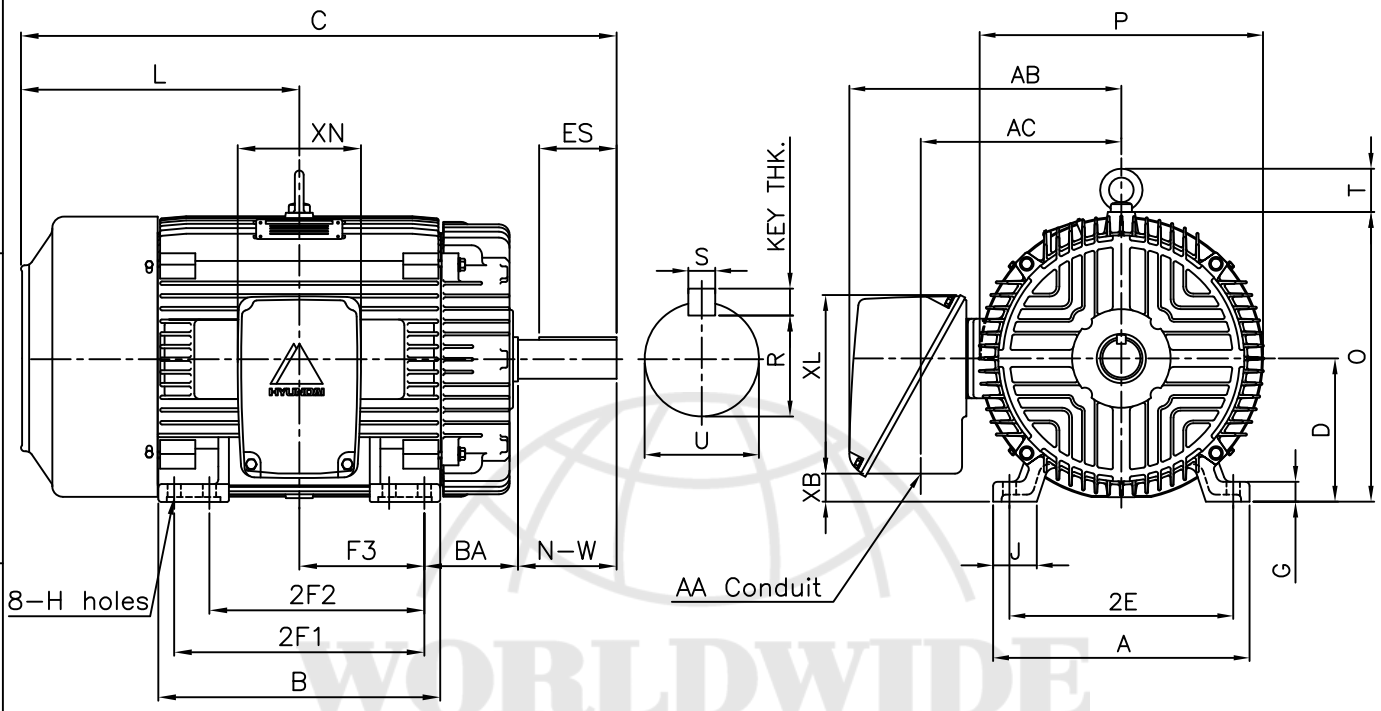

DIMENSIONS

MOUNTING									CONDUIT BOX						APPROX. WGT.(LB)
A	B	2E	2F1	2F2 [4]	F3	G	J	H	AA	AB	AC	XB	XL	XN	
14.33	15.74	12.50	13.98	12.00	6.99	1.11	2.36	0.66	2.00	15.20	11.21	1.57	10.16	7.01	620

OVERALL							SHAFT					KEY THK.	BEARING	
BA	C	D	L	O	P	T	U	N–W	KEYWAY				DRIVE END	OPP. DRIVE END
									R	ES	S			
5.25	31.40	8.00	14.90	16.19	15.84	2.41	2.125	5.25	1.845	3.91	0.500	0.500	6313ZC3	6211ZC3

NOTE

1. Dimension "D" tolerance : +0.00inch – 0.03inch
2. Dimension "U" tolerance : +0.000inch – 0.001inch
3. Dimension "R" tolerance : +0.000inch – 0.015inch
4. Location of holes for 326T frame

APPD BY	KIM.Y.S	UNIT	INCH
CHKD BY	KO.S.H	SCALE	1/12
CHKD BY		PROJEC'N	3rd Angle
DSND BY	LEE KWANG SOO	DATE	2004.04.02

SUBJECT	NEMA 326T(L)	CAD PROJ \ FILE
		XSMOUTN\A8112AA(L)

TITLE: OUTLINE

HYUNDAI HEAVY INDUSTRIES CO., LTD.
Electro–Electric System Division

REF. NO	A1112AA(L)	Sheet No. of
DWG NO	350A8112AA(L)	Revision No. 0

WORLDWIDE Electric Corp.

HYUNDAI HEAVY INDUSTRIES CO.,LTD.

PERFORMANCE CURVE

CURVE NO.

P-PLP326SR2

Type :	PLP			
Full Load Torque :	146.4	lb.ft		
Motor moment of Inertia (J) :	8.307	lb.ft ^{2}		
Load moment of Inertia (J) :	569.532	lb.ft ^{2}		

37 kW	50 HP	60 Hz		
4 P	Rated Speed :	1780 RPM		
Rated Voltage	460V			
Full Load Current	59.9A			

SPEED VS TORQUE & CURRENT CURVE

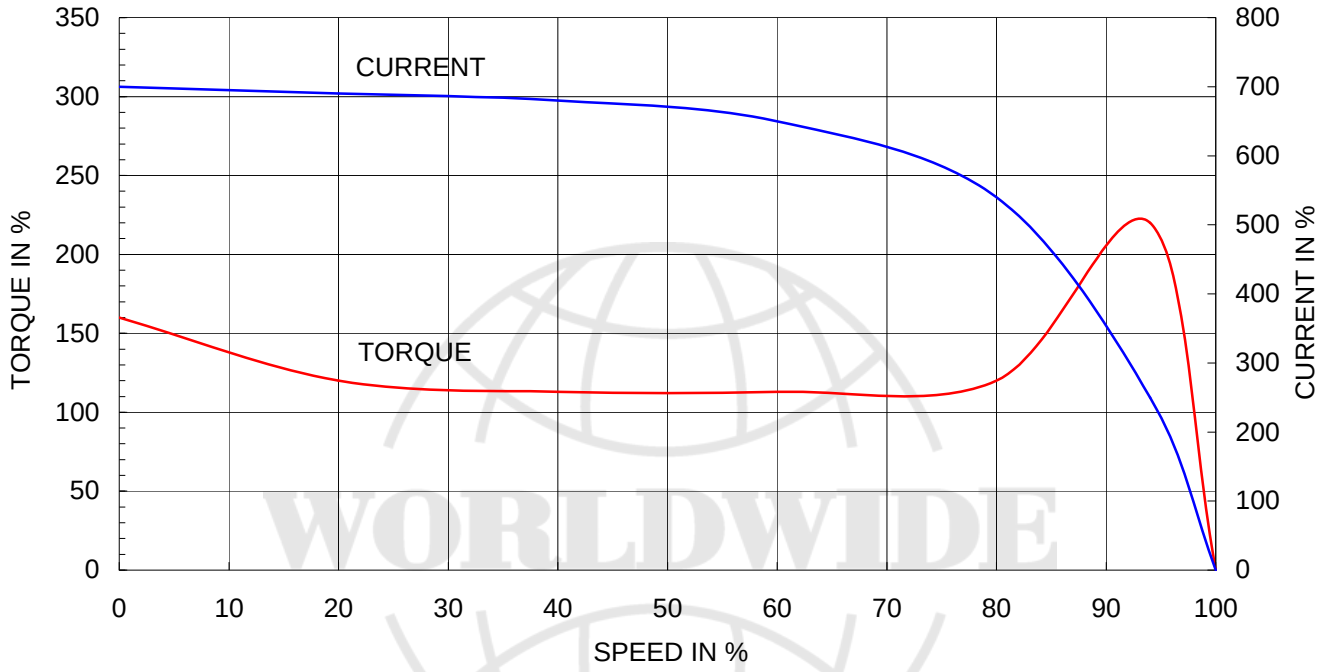

OUTPUT VS EFF., P.F & CURRENT CURVE

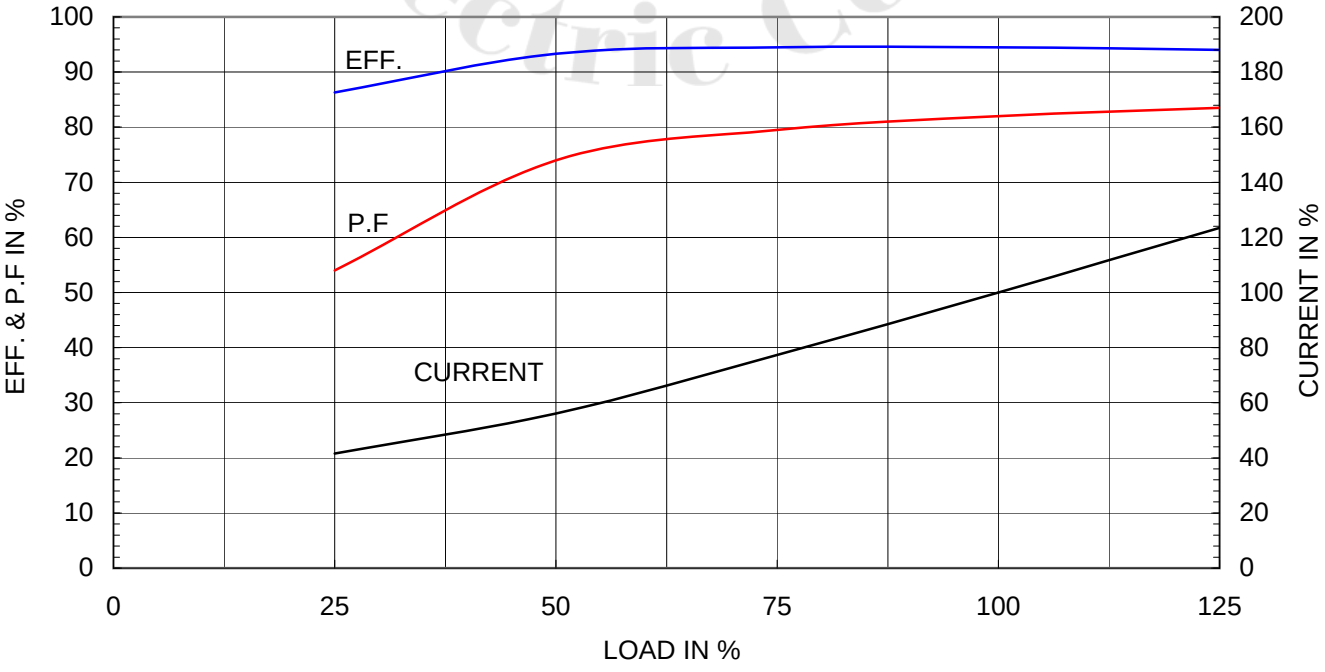

WORLDWIDE Electric Corp