# AC INDUCTION MOTOR DATA SHEET
# CROWN TRITON™ MOTORS

| | |
|---|---|
| MODEL NUMBER | **HHI50-12-365TC** |
| HORSEPOWER | **50** |
| RPM / POLES | **1200 / 6** |
| VOLTAGE / PHASE | **230 / 460 V / 3** |
| FRAME | **365TC** |
| ENCLOSURE / DEGREE OF PROTECTION | **TEFC / IP54** |
| FREQUENCY | **60 HZ** |
| FULL LOAD SPEED | **1185 RPM** |
| SERVICE FACTOR | **1.15 SF at 40° C / 1.0 SF at 65° C** |
| INSULATION CLASS | **F Class N Varnish** |
| FULL LOAD AMPS; 230 / 460 | **120.4 / 60.2 A** |
| LOCKED ROTOR CURRENT (% Full Load) | **680 / 680 %** |
| NEMA CODE LETTER | **H** |
| EFFICIENCY / POWER FACTOR | LOAD / EFF. / P.F.<br>**100 % / 94.1 % / 82.0 %**<br>**75 % / 94.3 % / 80.0 %**<br>**50 % / 94.0 % / 73.5 %** |
| DUTY CYCLE | **S1 / Continuous** |
| TORQUE | FULL LOAD / LRT / BDT<br>**220.0 lb.ft. / 150 % / 220 %** |
| NEMA DESIGN | **B** |
| MOMENT OF INERTIA | LOAD (Max.) / MOTOR<br>**1500.593 lb.ft.$^2$ / 32.000 lb.ft.$^2$** |
| SOUND PRESSURE LEVEL ( No Load 1 M From Motor) | **72 dB(A)** |
| NUMBER OF STARTS (Hot / Cold) | **2 Hot / 3 Cold** |
| MAX. AMBIENT TEMPERATURE | **40° C at 1.15 SF / 65° C at 1.0 SF** |
| MAX. ELEVATION | **3300 Ft. Above Sea Level** |
| TEMPERATURE RISE (At Full Load) | **80° C** |
| DRIVE-END BEARING | **6314C3** |
| OPPOSITE DRIVE-END BEARING | **6213C3** |
| GREASE TYPE | **Mobil Polyrex EM** |
| MOUNTING | **F1 (F2 Suitable), W6, W8, B3, V5, V6** |
| ROTATION | **Bi-Directional** |
| APPROXIMATE WEIGHT | **840 lbs.** |
| AREA CLASSIFICATION | **Class I, Division 2, Groups A, B, C, D** |
| INVERTER RATING | **10:1 CT / 20:1 VT** |
| SPECIFICATION - In Accordance With | **NEMA, CSA** |

EEV 109973

CC 038A

REVISED 08/01/13

HYUNDAI HEAVY INDUSTRIES CO., LTD.

본 도면은 현대중공업(주) 재산이므로 허가없이 복사할 수 없음 (취급유의)

THIS DRAWING IS PROPRIETARY TO HHI. NO PART OF THIS DRAWING MAYBE REPRODUCED WITHOUT THE PERMISSION OF HHI.

HYUNDAI HEAVY INDUSTRIES CO., LTD.

# TEFC

## THREE PHASE INDUCTION MOTOR

| TYPE | LP, JP |
|---|---|
| | Cast iron frame |

| FRAME SIZE | OUTPUT(HP) | POLES | Hz | TIME RATING |
|---|---|---|---|---|
| 365TC | | | 60 | CONT |

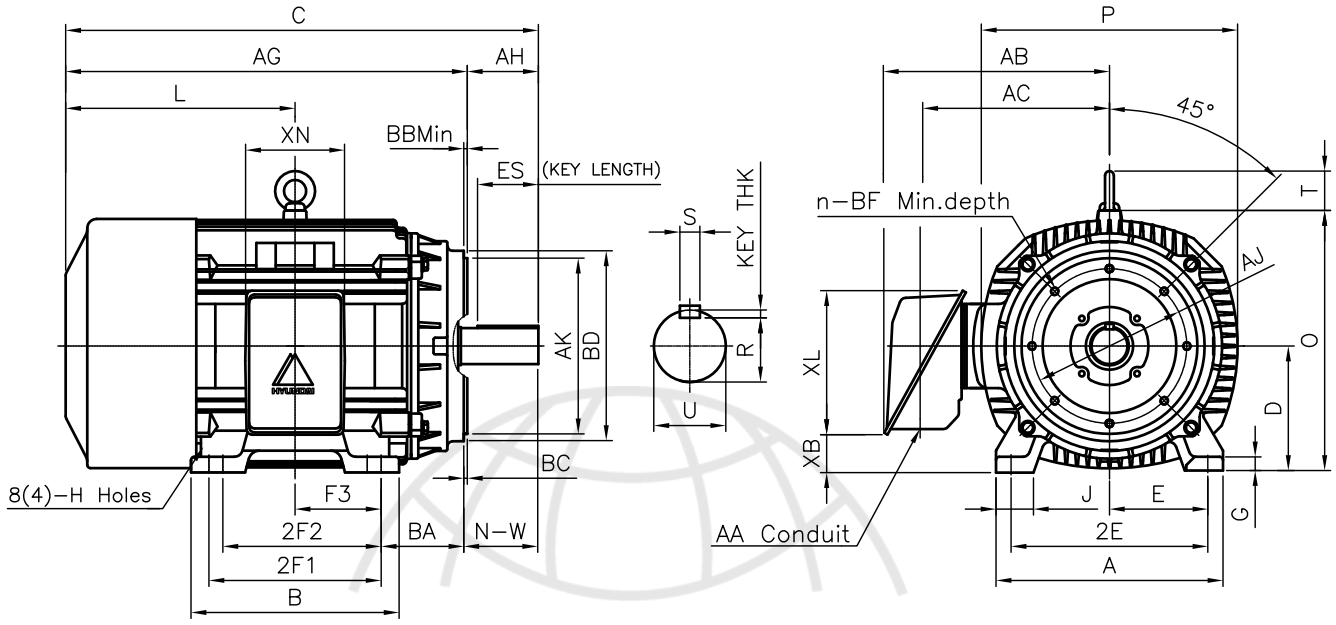


## DIMENSIONS

| MOUNTING | | | | | | | | | CONDUIT BOX | | | | | | APPROX. WGT.(LB) |
|---|---|---|---|---|---|---|---|---|---|---|---|---|---|---|---|
| A | B | 2E | 2F1 | 2F2 | F3 | G | J | H | AA | AB | AC | XB | XL | XN | |
| 16.14 | 14.92 | 14.00 | 12.25 | (11.25) | 6.122 | 0.98 | 2.72 | 0.66 | 3.00 | 17.13 | 13.82 | 2.70 | 10.24 | 7.09 | 820 |

| OVERALL | | | | | | | | SHAFT | | | | | KEY | BEARING | |
|---|---|---|---|---|---|---|---|---|---|---|---|---|---|---|---|
| BA | C | D | L | O | P | T | AG | U | N-W | KEYWAY R | KEYWAY ES | KEYWAY S | THK. | DRIVE END | OPP. DRIVE END |
| 5.88 | 34.01 | 9.00 | 16.13 | 18.50 | 17.75 | 2.80 | 28.13 | 2.375 | 5.88 | 2.021 | 4.28 | 0.625 | 0.625 | 6314C3 | 6213C3 |

| C-FACE | | | | | | | | |
|---|---|---|---|---|---|---|---|---|
| AJ | AK | BB Min | BC | BD | BF | BF depth | n | AH |
| 11.00 | 12.50 | 0.25 | 0.25 | 13.38 | 5/8-11 | 0.94 | 8 | 5.62 |

NOTE

1. Dimension "D" tolerance : +0.00inch ~ -0.03inch (143TC-365TC) : +0.000inch ~ -0.06inch (404TC-449TC)
2. Dimension "U" tolerance : +0.000inch ~ -0.0005inch (143TC-215TC): +0.000inch ~ -0.001inch (254TC-449TC)
3. Dimension "R" tolerance : +0.000inch ~ - 0.015inch
4. Dimension "AK" tolerance : +0.000inch ~ -0.003inch (143TC-286TC): +0.000inch ~ -0.005inch (324TC-449TC)

| | | | | | | |
|---|---|---|---|---|---|---|
| APPD BY | K.J. KANG | UNIT | INCH | SUBJECT | 365TC | CAD PROJ \ FILE: MMSTDMTR\A1314AA |
| CHKD BY | | SCALE | N/S | TITLE | OUTLINE | |
| CHKD BY | | PROJEC'N | 3rd Angle | | | |
| DSND BY | N.D.LEE | DATE | 2011.02.09 | | | |

HYUNDAI HEAVY INDUSTRIES CO., LTD.
Electro-Electric System Division

| | | |
|---|---|---|
| REF. NO | A1314AA | Sheet No. of |
| DWG NO | 350A1314AA | Revision No. 0 |

| HYUNDAI HEAVY INDUSTRIES CO.,LTD. | PERFORMANCE CURVE | CURVE NO. |
|---|---|---|
| | | P-PLP365SR06 |

| | | |
|---|---|---|
| Type : | PLP | |
| Full Load Torque : | 220.0 | lb.ft |
| Motor moment of Inertia (J) : | 32.000 | lb.ft $^2$ |
| Load moment of Inertia (J) : | 1500.593 | lb.ft $^2$ |

| | | | |
|---|---|---|---|
| 37 kW | 50 HP | 60 Hz | |
| 6 P | Rated Speed : | 1185 RPM | |
| Rated Voltage | 575V | 460V | 230V |
| Full Load Current | 48.1A | 60.2A | 120.4A |

SPEED VS TORQUE & CURRENT CURVE

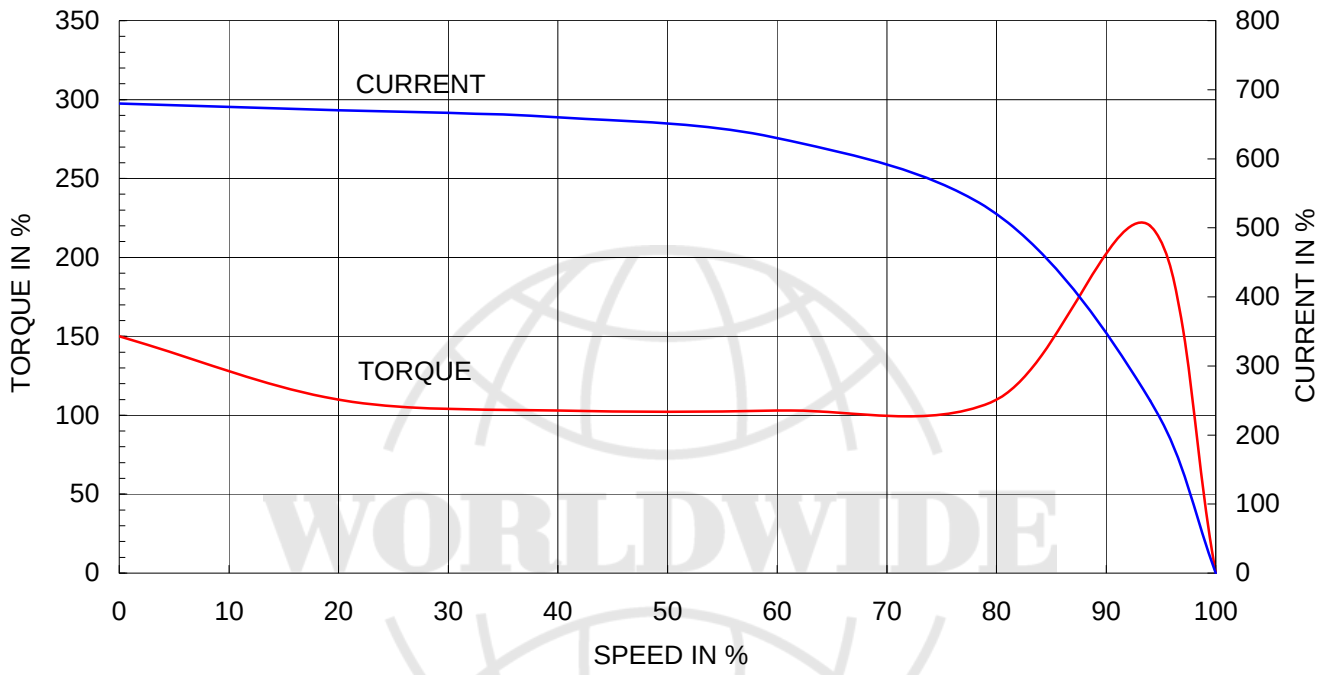


OUTPUT VS EFF., P.F & CURRENT CURVE

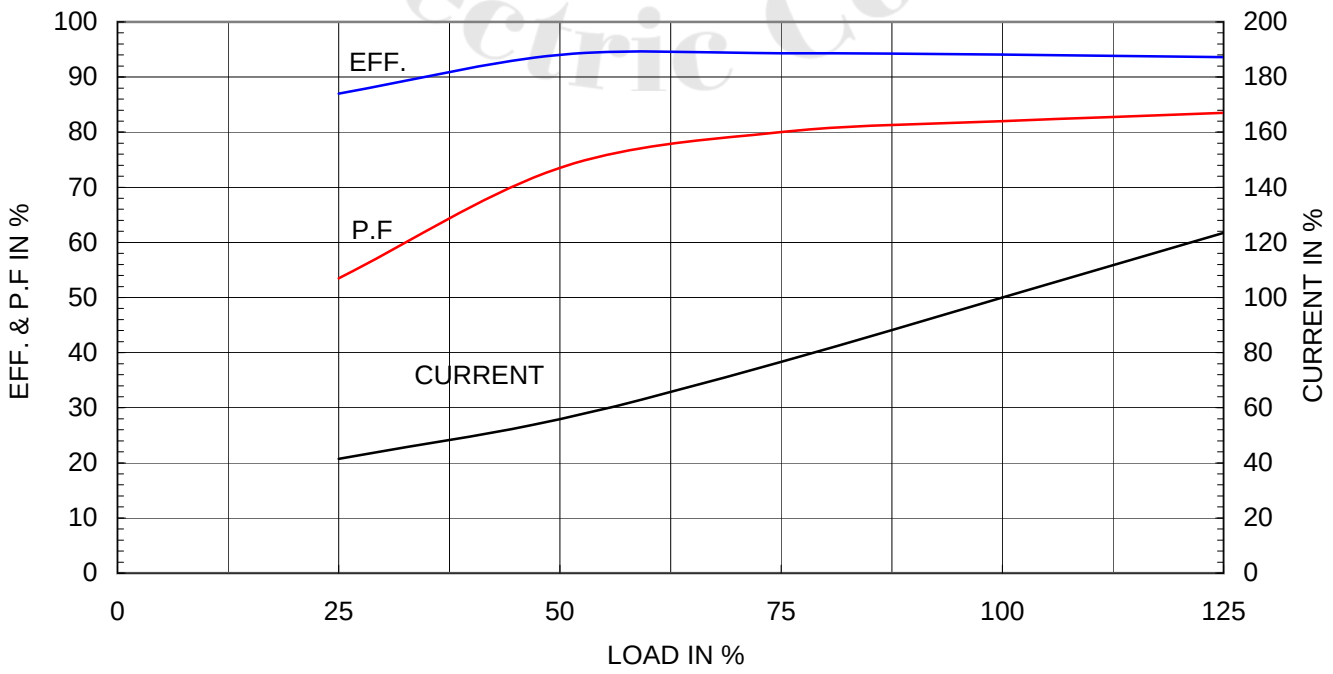


WORLDWIDE Electric Corp.