AC INDUCTION MOTOR DATA SHEET
CROWN TRITON™ MOTORS

MODEL NUMBER	**HHI75-18-365TS**
HORSEPOWER	**75**
RPM / POLES	**1800 / 4**
VOLTAGE / PHASE	**230 / 460 V / 3**
FRAME	**365TS**
ENCLOSURE / DEGREE OF PROTECTION	**TEFC / IP54**
FREQUENCY	**60 HZ**
FULL LOAD SPEED	**1780 RPM**
SERVICE FACTOR	**1.15 SF at 40° C / 1.0 SF at 65° C**
INSULATION CLASS	**F Class N Varnish**
FULL LOAD AMPS; 230 / 460	**170.3 / 85.1 A**
LOCKED ROTOR CURRENT (% Full Load)	**690 / 690 %**
NEMA CODE LETTER	**G**
EFFICIENCY / POWER FACTOR	LOAD / EFF. / P.F. **100 % / 95.4 % / 85.0 %** **75 % / 95.5 % / 81.9 %** **50 % / 93.6 % / 74.1 %**
DUTY CYCLE	**S1 / Continuous**
TORQUE	FULL LOAD / LRT / BDT **217.7 lb.ft. / 150 % / 220 %**
NEMA DESIGN	**B**
MOMENT OF INERTIA	LOAD (Max.) / MOTOR **654.961 lb.ft.^{2} / 20.900 lb.ft.^{2}**
SOUND PRESSURE LEVEL (No Load 1 M From Motor)	**80 dB(A)**
NUMBER OF STARTS (Hot / Cold)	**2 Hot / 3 Cold**
MAX. AMBIENT TEMPERATURE	**40° C at 1.15 SF / 65° C at 1.0 SF**
MAX. ELEVATION	**3300 Ft. Above Sea Level**
TEMPERATURE RISE (At Full Load)	**80° C**
DRIVE-END BEARING	**6314C3**
OPPOSITE DRIVE-END BEARING	**6213C3**
GREASE TYPE	**Mobil Polyrex EM**
MOUNTING	**F1 (F2 Suitable), W6, W8, B3, V5, V6**
ROTATION	**Bi-Directional**
APPROXIMATE WEIGHT	**820 lbs.**
AREA CLASSIFICATION	**Class I, Division 2, Groups A, B, C, D**
INVERTER RATING	**10:1 CT / 20:1 VT**
SPECIFICATION - In Accordance With	**NEMA, CSA**

EEV 109973

CC 038A

REVISED 08/01/13

HYUNDAI HEAVY INDUSTRIES CO., LTD.

본 도면은 현대중공업(주) 재산이므로 허가없이 복사할 수 없음 (취급유의)

THIS DRAWING IS PROPRIETARY TO HEECO. NO PART OF THIS DRAWING MAYBE REPRODUCED WITHOUT THE PERMISSION OF HHI.

HYUNDAI HEAVY INDUSTRIES CO., LTD.

T E F C

THREE PHASE INDUCTION MOTOR

TYPE	LP, JP
	Cast iron frame

FRAME SIZE	OUTPUT(HP)	POLES	Hz	TIME RATING
365TS			60	CONT

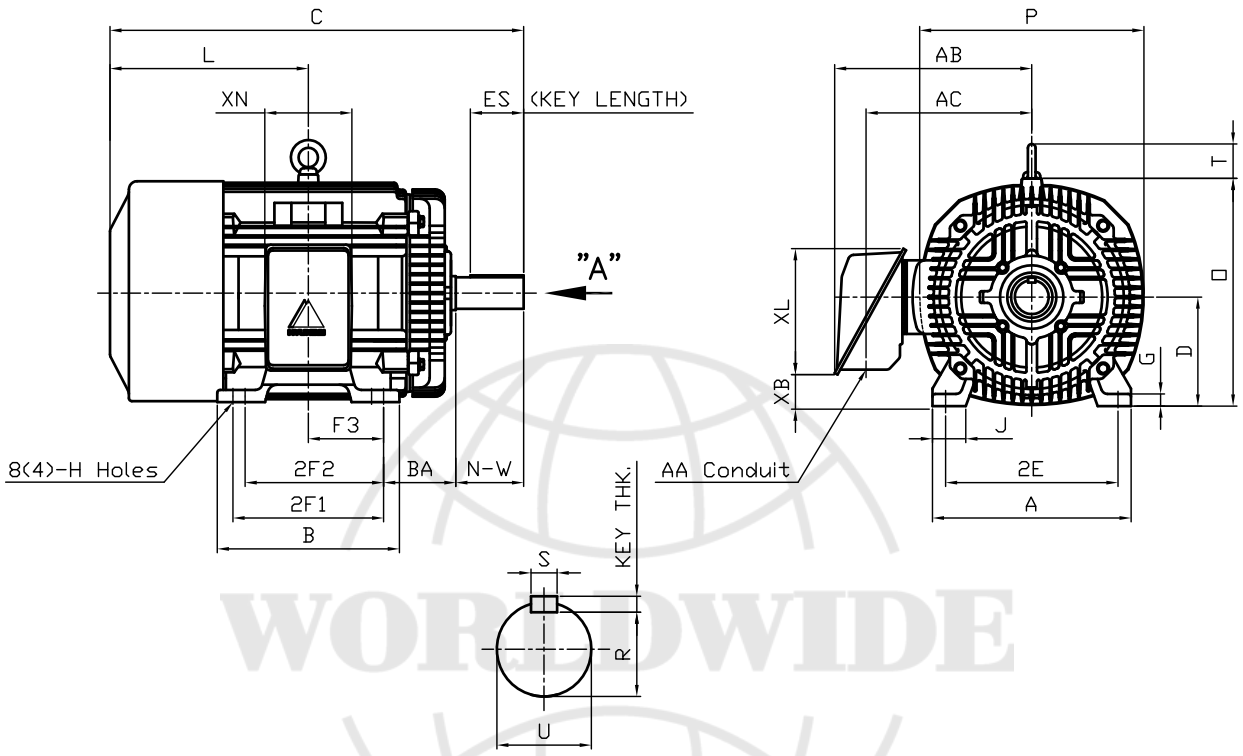

VIEW "Q"

DIMENSIONS

MOUNTING									CONDUIT BOX						APPROX. WGT.(LB)
A	B	2E	2F1	2F2	F3	G	J	H	AA	AB	AC	XB	XL	XN	
16.14	14.92	14.00	12.25	(11.25)	6.122	0.98	2.72	0.66	2.50	17.13	13.82	2.70	10.24	7.09	820

OVERALL							SHAFT					KEY	BEARING	
BA	C	D	L	O	P	T	U	N-W	KEYWAY			THK.	DRIVE END	OPP. DRIVE END
									R	ES	S			
5.88	31.88	9.00	16.13	18.50	18.23	2.80	1.875	3.75	1.591	2.03	0.500	0.500	6213C3	6213C3

NOTE

1. Dimension "D" tolerance : +0.00inch – 0.03inch (143T–365T) ; +0.000inch – 0.06inch (404T–449T)
2. Dimension "U" tolerance : +0.000inch – 0.005inch (143T–215T), +0.000inch – 0.001inch (254T–449T)
3. Dimension "R" tolerance : +0.000inch – 0.015inch

Q'TY	DESCRIPTION	MATERIAL	DIMENSION	WEIGHT	PART NO.	REMARK	NO.

APPD BY	K.J. KANG	UNIT	INCH
Q.P CHK		SCALE	N/S
CHKD BY		PROJEC'N	3 각법(3rd Angle)
DSND BY	N.D.LEE	DATE	2011.02.09

SUBJECT	365TS	CAD PROJ 명 \ FILE 명 MMSTDMTR\A1114BA
TITLE	OUTLINE	
REF. NO	A1114BA	Sheet No. of
DWG NO	350A1114BA	Revision No. 0

HYUNDAI HEAVY INDUSTRIES CO., LTD.

HYUNDAI HEAVY INDUSTRIES CO.,LTD.	PERFORMANCE CURVE	CURVE NO.
		P-PLP365SR04

Type :	PLP	
Full Load Torque :	217.7	lb.ft
Motor moment of Inertia (J) :	20.900	lb.ft ^{2}
Load moment of Inertia (J) :	654.961	lb.ft ^{2}

55 kW	75 HP	60 Hz	
4 P	Rated Speed :	1780 RPM	
Rated Voltage	575V	460V	230V
Full Load Current	68.1A	85.1A	170.3A

SPEED VS TORQUE & CURRENT CURVE

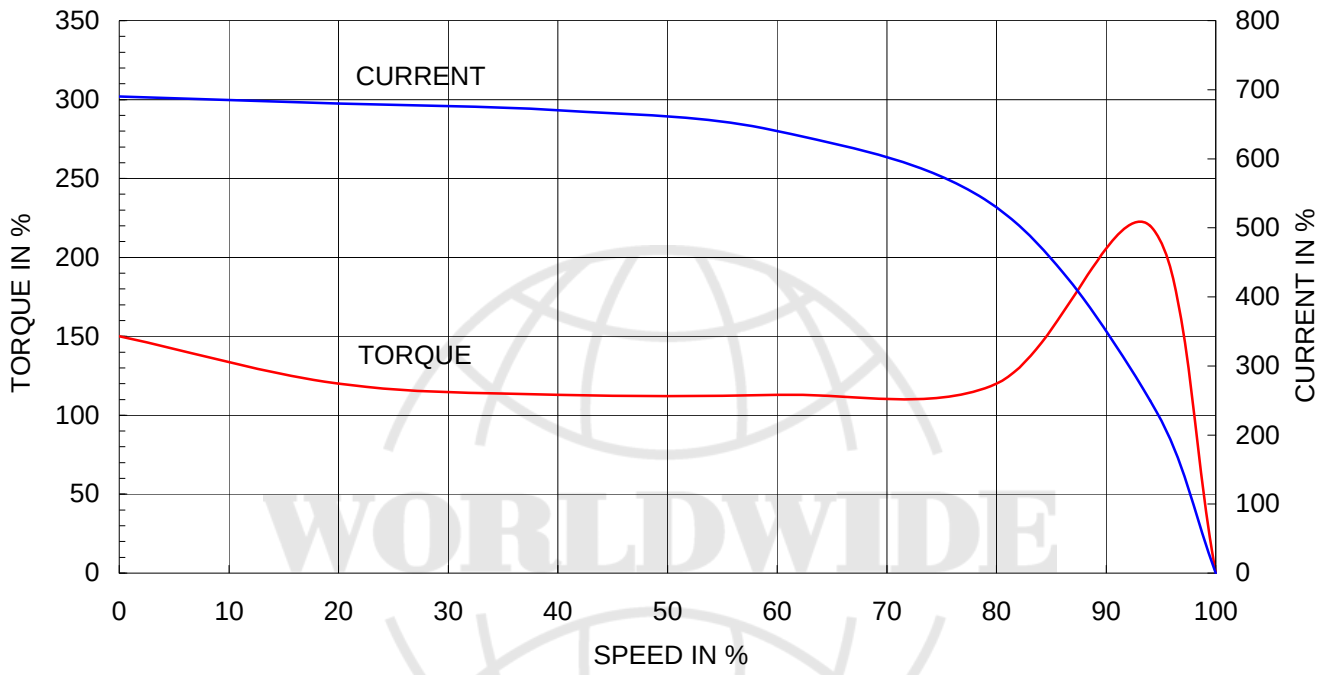

OUTPUT VS EFF., P.F & CURRENT CURVE

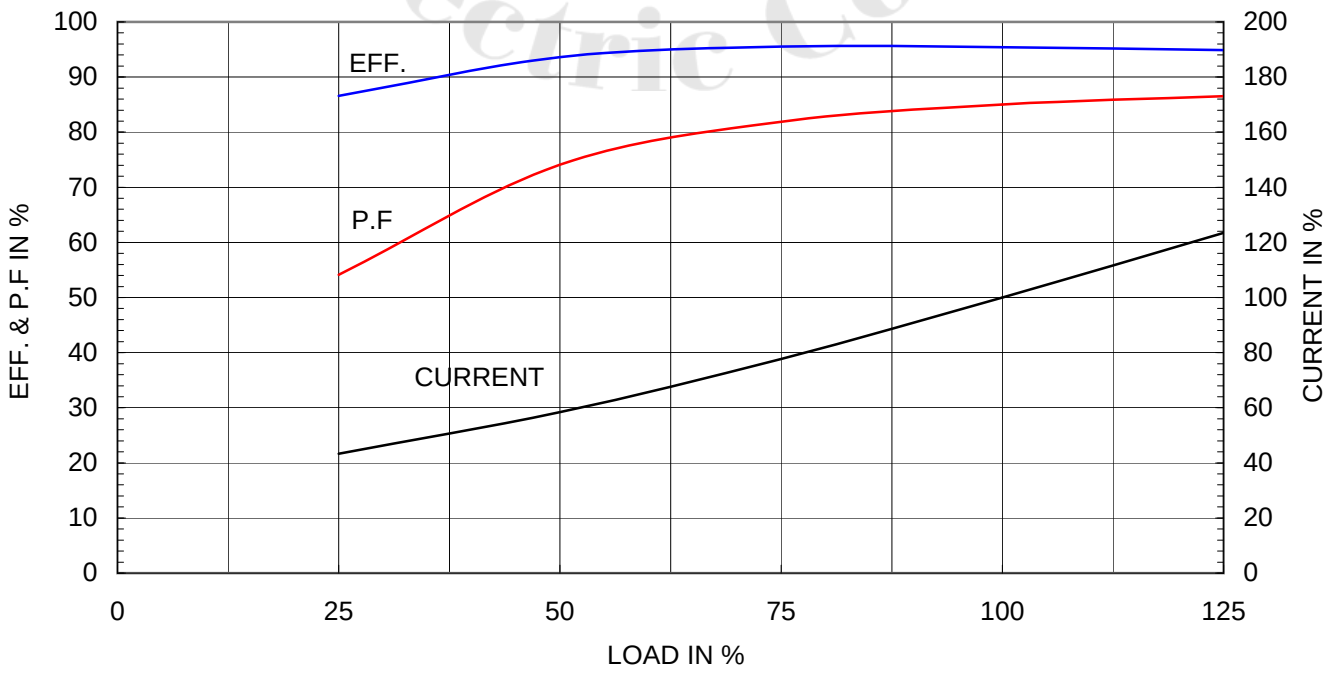

WORLDWIDE Electric Corp.