AC INDUCTION MOTOR DATA SHEET

HYUNDAI HEAVY INDUSTRIES CO.,LTD.

Model No. or RFQ No.	HT1000-18-6810	Item No.		Rev. No.	
Project Name		Project No.		Quantity	

GENERAL SPECIFICATION

Frame Size		6810
Type		HLE5 6810
Enclosure (Protection)		TEFC (IP54)
Method Of Cooling		IC411
Rated Frequency		60 Hz
Number Of Phases		3
Insulation Class		F
Temp. Rise At Full Load (By Resistance Method)		
	At 1.0 S.F.	80°C
Motor Location		Indoor
Altitude		Less Than 1000 Meters
Relative Humidity		Less Than 90%
Ambient Temp.		40°C (Max.)
Duty Type		Continuous (S1)
Service Factor		1.15
Mounting		B3, Horizontal
Bearing	Type	Anti-Friction
	DE/N-DE	6226C3 / 6226C3
	Lubricant	Grease (Alvania RL2)
External Thrust		Not Applicable
Coupling Method		Direct
Shaft Extension		Single
Terminal Box	Main	Steel
	Aux.	Yes
	Location	Refer To Outline Drawing
Application		---
Area Classification		Non-Hazardous, Non-Seismic
Type Of Ex-Protection		Not Applicable
Applicable Standard		IEEE, NEMA

PERFORMANCE DATA

Rated Output		1000 HP	
Number of Poles		4	
Rotor Type		SQUIRREL CAGE	
Starting Method *		D.O.L.	
Rated Voltage		4160 V	2300 V
Current	Full Load	124.6 A	225.4 A
	Locked-Rotor**	600%	600%
Efficiency			
	50% Load	94.4 %	
	75% Load	95.5 %	
	100% Load	96.0 %	
Power Factor (p.u.)			
	50% Load	0.77	
	75% Load	0.84	
	100% Load	0.87	
Speed at Full Load		1791 RPM	
Torque			
	Full Load	2934 LB-FT	
	Locked-Rotor**	80 %	75 %
	Breakdown**	220 %	200 %
GD^2			
	Load		
	Motor		
Sound Pressure Level (No-load & Mean Value At 1m From Motor)		88 dB(A)	
Vibration		3.8 mm/sec (peak)	
Permissible Number Of Consecutive Starts		Cold	2 times
		Hot	1 time
Paint	Munsell No.	7.5BG6/1.5	

ACCESSORIES

1. Winding Temp. Detector (Pt 100 Ω) : 2 EA / Phase
2. Space Heater : 120V, 300W, 1 Phase

SUBMITTAL DRAWING

Outline Dimension Drawing	/	Motor Weight (Approx.)
	HT1000-18-6810	8580 lbs.

SPARE PARTS

REMARK

DISTRIBUTED IN THE UNITED STATES BY:
WORLDWIDE ELECTRIC CORPORATION
ROCHESTER, NEW YORK

Date	DSND	CHKD	CHKD	APPD
11-19-09	M.H.KIM	S.C.HWANG		J.W.LIM

Note: Others not mentioned in this data sheet shall be in accordance with maker standard.
Above technical data are only design values and shall be guaranteed with tolerance of applicable standard.
Inspection and performance test shall be maker standard, if not mentioned.
* In case of Inverter-Fed Motor, performance data is based on sine wave tests.
** The data are based on rated voltage & frequency, and data are expressed as a percentage of full load value.

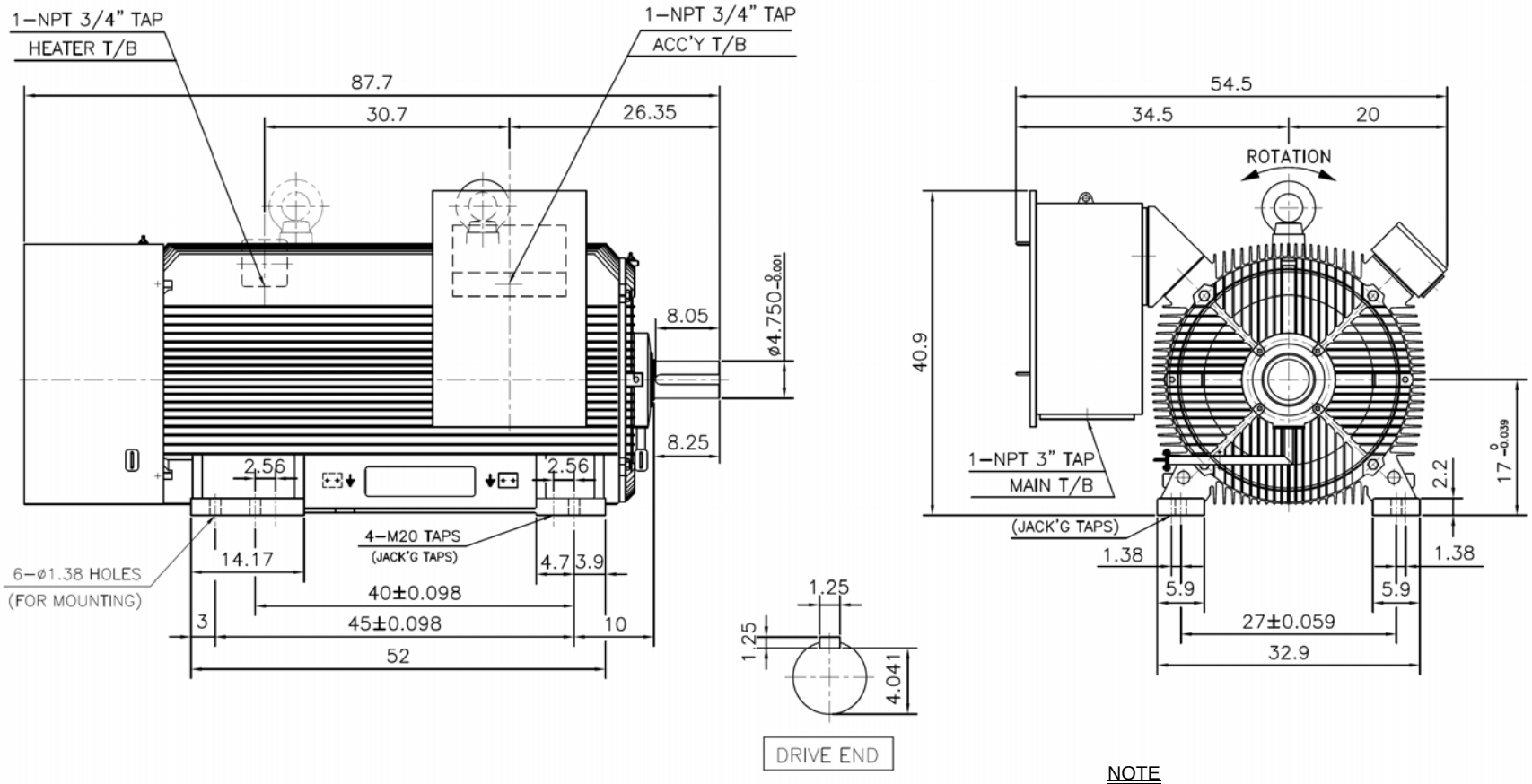

NOTE

Motor can be operated in the other direction by reversing the L1 and L3 leads.

THREE PHASE INDUCTION CAGE ROTOR MOTOR (TEFC)

TYPE	FRAME NO.	OUTPUT	POLES	VOLTAGE	FREQUENCY	MOUNTING	WEIGHT	BEARING NO.	
								D.E.	N-D.E.
HLE5 6810	6810	1000 HP	4 P	4160 V / 2300 V	60 Hz	B3	8580 lbs.	6226C3	6226C3

DISTRIBUTED IN THE UNITED STATES BY:
WORLDWIDE ELECTRIC CORPORATION
ROCHESTER, NEW YORK

Q'TY	DESCRIPTION	MATERIAL	DIMENSION	WEIGHT	PART NO.	REMARK	NO.

APPD BY	J.W.Lim	UNIT	INCH	SUBJECT	HLE5 6810	DWG SIZE A3 (1:15)
CHKD BY		SCALE	1/15	TITLE	OUTLINE	
CHKD BY	S.C.Hwang	PROJEC'N	3각법(3rd Angle)			
DSND BY	H.T.Lim	DATE	2009-05-06			
HYUNDAI HEAVY INDUSTRIES CO., LTD.				REF. NO	-	Sheet No. of
				DWG NO	HT1000-18-6810	Revision No. 0