WORLDWIDE ELECTRIC MOTOR DATA SHEET

XPEWWE1.5-12-182T

HP	**1.5**
RPM / POLES	**1200 / 6**
VOLTAGE / PHASE	**230 / 460 V / 3**
FRAME	**182T**
ENCLOSURE	**TEFC (IP55)**
FREQUENCY	**60 HZ**
RATED SPEED	**1183 RPM**
FULL LOAD AMPS	**4.2 / 2.1 A**
DUTY CYCLE	**CONTINUOUS**
SERVICE FACTOR	**1.15**
INSULATION CLASS	**F**
AMBIENT TEMP.	**40° C**
ALTITUDE	**3300 FT.**
TEMP. RISE @ FULL LOAD	**80° C**
DESIGN	**B**
RATED TORQUE	**6.6 LB. FT.**
LOCKED ROTOR TORQUE	**239%**
BREAKDOWN TORQUE	**341%**
LOCKED ROTOR AMPS (STARTING)	**40.0 / 20.0 A**
IL / IN	**9.5 / CODE M**
SLIP	**1.61%**
NO LOAD CURRENT	**2.64 / 1.32 A**
MAX. TIME LOCKED ROTOR (HOT)	**8.2 SECONDS**
DE BEARING	**6306-ZZ**
ODE BEARING	**6306-ZZ**
REGREASING INT. - DE BEARING	**---**
REGREASING INT. - ODE BEARING	**---**
MOUNTING	**F1**
ROTATION	**CW / CCW**
MOMENT OF INERTIA	**0.0213 LB. FT.^{2}**
SHAFT MATERIAL	**1045 CARBON STEEL**
CONNECTION DIAGRAM	**230 / 460 V - 9 LEAD Y/Y**
APPROX. WEIGHT	**113 LBS.**
AREA CLASSIFICATION	**CLASS I, DIVISION 1, GROUPS C & D** **CLASS II, DIVISION 1, GROUPS E, F & G**
CSA CERTIFIED FOR USE	**CLASS I, DIVISION 2 HAZARDOUS LOCATIONS**

LOAD	POWER FACTOR	EFFICIENCY (%)
100%	**0.71**	**87.5**
75%	**0.61**	**86.5**
50%	**0.50**	**84.5**

C US

ISO9001 CERTIFIED

E301984

REVISED - 08/15/12

WORLDWIDE ELECTRIC MOTOR DRAWING

XPEWWE-182T

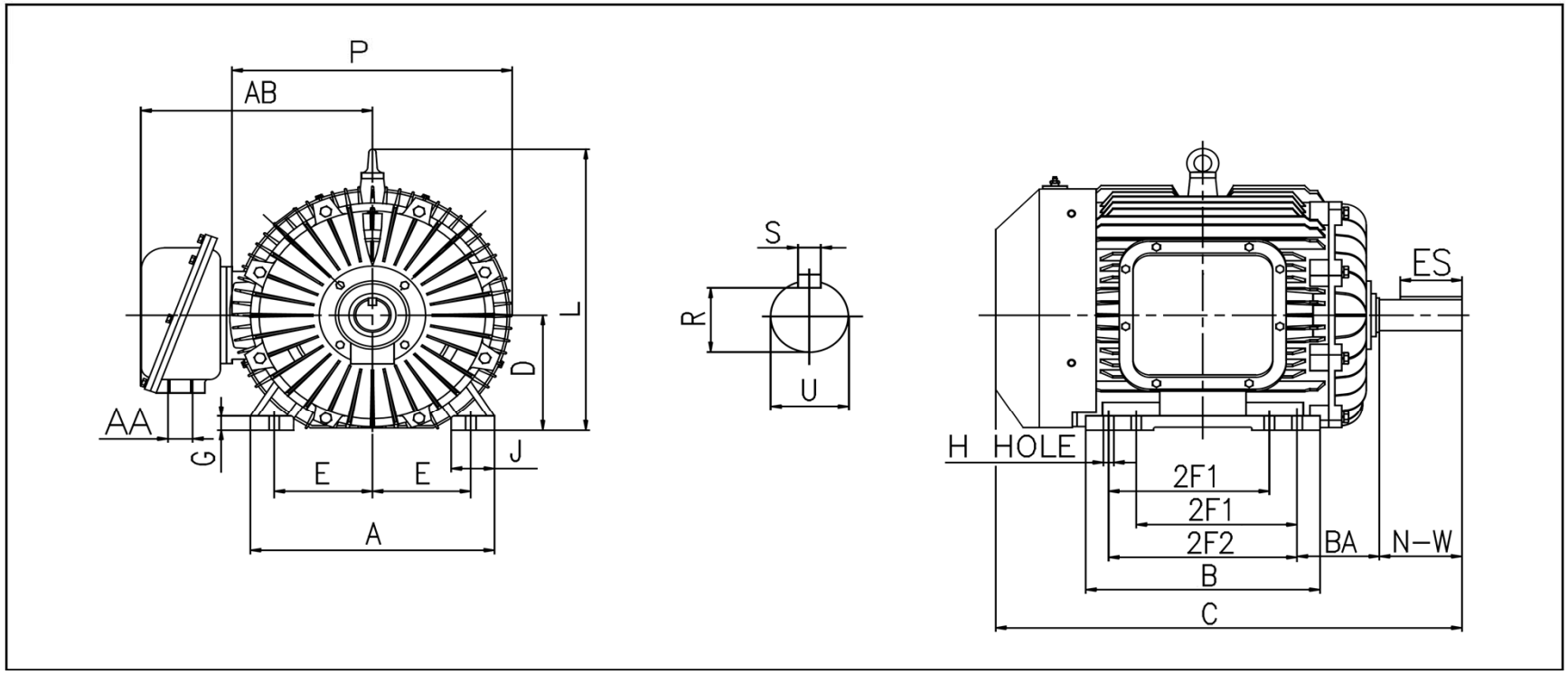

MOUNTING										
E	2F1	2F2	H	BA	A	B	C	D	G	J
3.75	4.5	5.5	0.41	2.75	8.85	7.87	17.13	4.5	0.67	1.69

				KEY		KEYSEAT	SHAFT	
L	P	AA	AB	ES	S	R	N-W	U
11.4	9.84	3/4	9.06	1.77	0.25	0.986	2.75	1.125

ALL DIMENSIONS IN INCHES